Swing Changeable Glassboard

Product Specifications

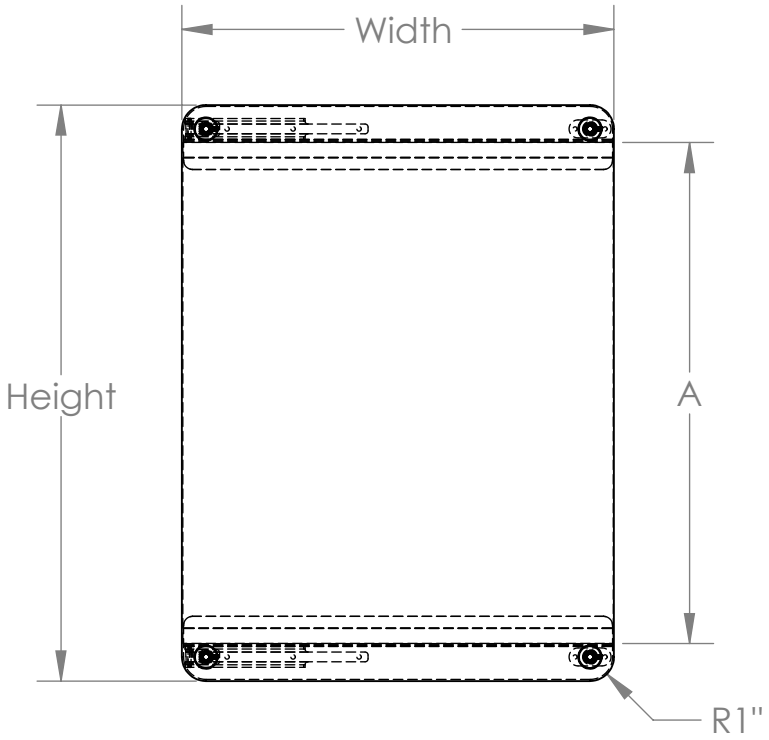

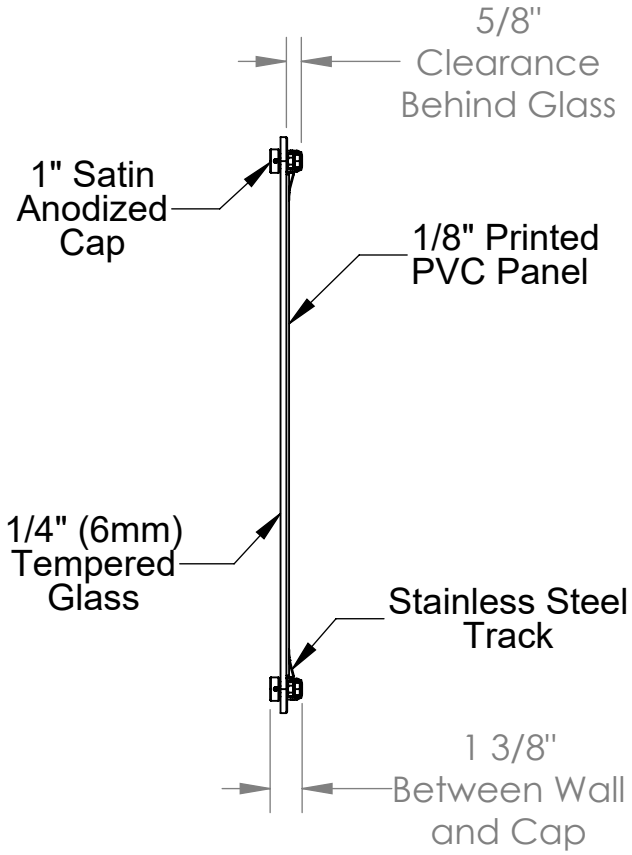

Materials:

- 1" Diameter satin anodized cap
- Writing surface: 1/4" Thick tempered low-iron glass
- Insert: 1/8" Thick printed PVC panel
- Stainless steel tracks hold insert panels

Features:

- Hinged glassboard opens for easy panel removal
- Integrated stop prevents hinge from opening more than 90 degrees
- VividCore insert slides from right or left when closed
- Insert can be printed single or double-sided
- 5/8" Clearance behind glass when closed allows for easy access to inserts
- Lifetime surface warranty

Notes:

- Indoor use only

Specs:

Part Number	Height	Width	"A"
VBSW1612-XX	16"	12"	12-7/8"
VBSW2418-XX	24"	18"	20-7/8"
VBSW2424-XX	24"	24"	20-7/8"
VBSW3024-XX	30"	24"	26-7/8"
VBSW3624-XX	36"	24"	32-7/8"

XX - Signifies Insert & Glass Printing Options